Georg Neumann GmbH | Berlin

Neumann-Information 88038 Feb. 88

DCH 148 DC/DC Converter

The DCH 148 is a hybrid DC/DC converter to be used in 48 V phantom power supplies for condenser microphones. The input voltage range is 7 - 26 V DC. The converter contains the input coupling circuits for two microphone channels with laser trimmed resistors (matching accuracy 0,2 %).

A separate output pin also allows direct access to the 48 V output voltage. Output voltages lower than 48 V (≥ 40 V) may be achieved using only one external resistor.

High efficiency, very effective load and input voltage regulation and a minimum of required external components make this device ideal for high quality microphone power supplies using unregulated input voltage or battery powering.

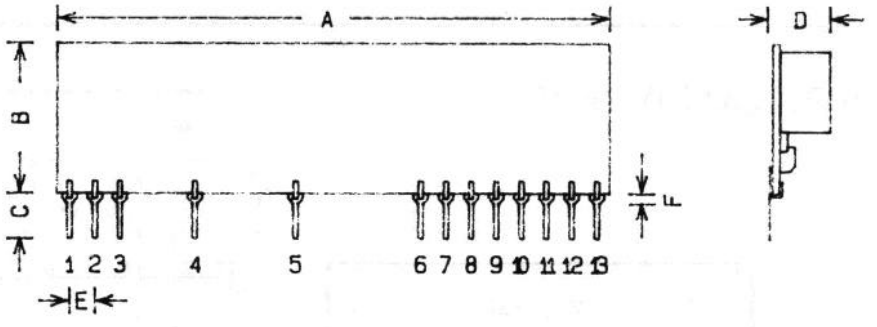

COMPONENT SIDE VIEW

PINS:

1 - C
2 - L
3 - GND_C
4 - GND_{SUPPLY}
5 - V_{SUPPLY}
6 - $V_{OUT\ ADJ}$
7 - V_{OUT}
8 - GND_{OUT}
9 - B] MOD 1
10 - A]
11 - GND_{OUT}
12 - B] MOD 2
13 - A]

DIMENSIONS:

A - max 56.5 mm
B - max 15.2 mm
C - 4.5 mm
D - max 6.0 mm
E - 2.54 mm
F - 1.0 mm

CHARLOTTENSTRASSE 3 · D-1000 BERLIN 61 · POSTFACH 610469 · TELEGRAMM: NEUMANNACUSTIC
TELEFON: (030) 25993-0 · TELEFAX: (030) 25993-108 · TELEX: 184595 NEUAK D

Printed in Germany

ELECTRICAL CHARACTERISTICS:
(Abbreviations see application note)

PARAMETER	CONDITIONS	MIN	MAX	UNITS
Input Voltage V_{IN}		7,0	26,0	V
Output Voltage V_{OUT}	I_L =2mA V_{IN} =9,0V I_L =12mA V_{IN} =7,0V I_L =0,2mA V_{IN} =24V	47,7 47,0 -	48,3 - 49,0	V V V
Input Current I_{IN}	I_L =2mA V_{IN} =9,0V I_L =0,2mA V_{IN} =9,0V I_L =12mA V_{IN} =9,0V	- - -	21 6 120	mA mA mA
Total Output Current I_L	$I_L = I_{L1} + I_{L2} + I_{L3} + I_{L4} + I_{L5}$	12	-	mA
Max. Output Current per Channel I_{MOD1}/I_{MOD2}	$I_{MOD1} = I_{L1} + I_{L2}$ $I_{MOD2} = I_{L3} + I_{L4}$	5	-	mA
Power Supply Rejection Ratio PSRR	I_L =2mA V_{IN} =9,0V	76	-	dB

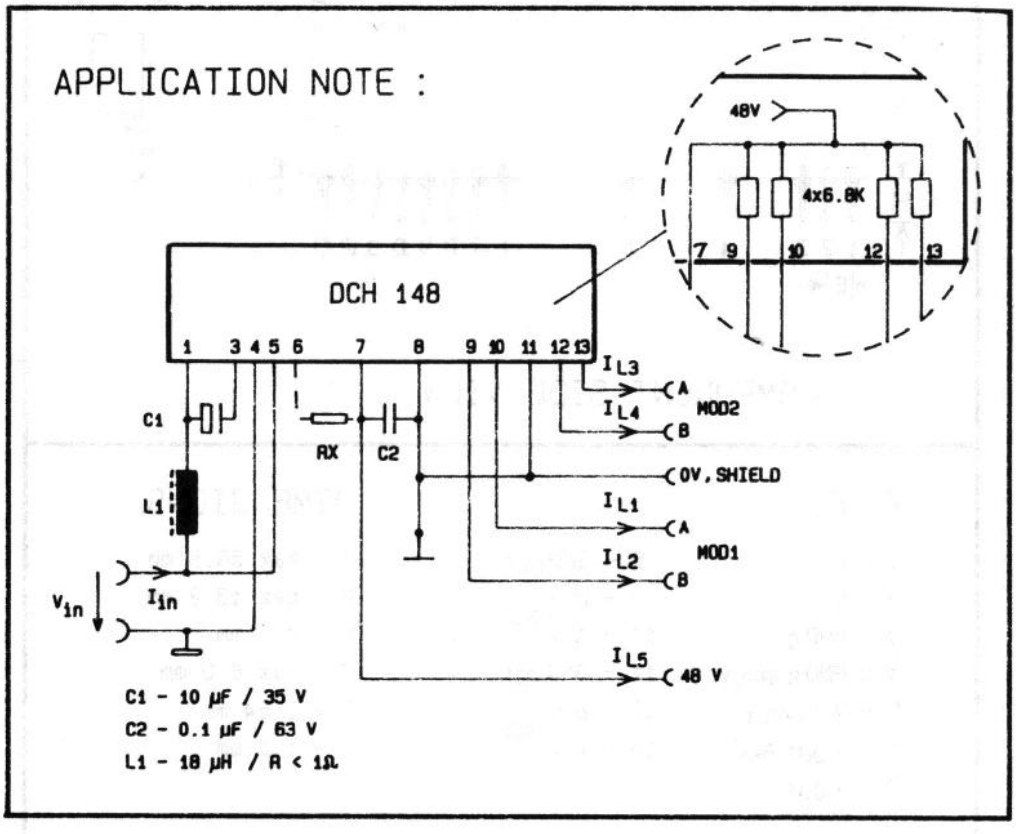

Errors excepted. Subject to changes.